THE UNIVERSITY OF BRITISH COLUMBIA
Department of Electrical and Computer Engineering

ELEC 401 – Analog CMOS Integrated Circuit Design
Take-Home Midterm Exam
Due: Monday, October 18th, 2021 at 11:59 pm

This is an open book take-home exam and calculators are allowed. Please attempt to answer all problems. A blank sheet will not receive any marks! Please do not consult and/or discuss the questions and/or your solutions with anyone. Your solutions/answers should be based on your individual effort! Please also note that each question has its own transistor parameters.

Good luck!

This exam consists of 6 – 6/6 (= 5) questions and including the cover page has 6+6(=12) pages. Please check that you have a complete copy.

Shanks Cole

Surname First name

54950860

Student Number

#	MAX	GRADE
1	20	
2	20	
3	20	
4	20	
5	20	
TOTAL	100	

READ THIS

IMPORTANT NOTE:

Candidates guilty of any of the following, or similar, dishonest practices shall be liable to disciplinary action:

Speaking or communicating with other candidates or non-candidates regarding the exam questions.

Purposely exposing their solution to the view of other candidates.

The plea of accident or forgetfulness shall not be received.

1. In the following circuit assume that the bulks of the two NMOS transistors are connected to ground, and furthermore assume that the current source is ideal with I_{bias}=4 mA, and for both transistors we have $\lambda = 0$, $\gamma = 1\ V^{1/2}$, $2\Phi_F$=0.64 V, $V_{TH0} = 0.4$ V, $\mu_n C_{ox} = 500\ \mu A/V^2$, and (W/L) = 100.

a) Find the voltage of node X? **[8 marks]**

b) Find the voltage of node Y? **[10 marks]**

c) If we were to implement the current source with a single PMOS transistor which would had a effective voltage of 0.5 (i.e., V_{SG}-$|V_{THP}|$ = 0.5 V), then, what was the minimum required V_{DD} for the circuit to operate properly? **[2 marks]**

Body Effect ($\gamma \neq 0$):

$$V_{th} = V_{th0} + \gamma \cdot \left[\sqrt{|2\phi_F + V_{SB}|} - \sqrt{|2\phi_F|}\right]$$

$V_{S_1} = 0$

$$V_{th_1} = 0.4 + 1 \cdot \left(\sqrt{0.64+0} - \sqrt{0.64}\right)$$

$$= 0.4V$$

$$I_D = \frac{1}{2} \mu_n C_{ox} \frac{W}{L} \cdot (V_{GS} - V_{th})^2$$

$$4\times10^{-3} = \frac{1}{2} \cdot 500\times10^{-6} \cdot 100 \cdot (V_G - 0.4)^2$$

$$V_{G_1} = V_{S_2} = V_X = 0.8V$$

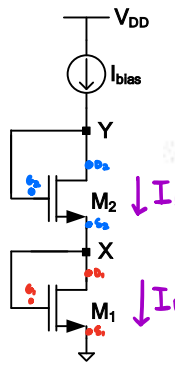

$I_{D_1} = I_{D_2} = I_{bias}$

I_{D_2}

$-V_{DS} > V_{GS} - V_{th}$ SATURATION (Active)

channel is pinched off.

I_{D_1}

(b) $$V_{th} = V_{th0} + \gamma \cdot \left[\sqrt{|2\phi_F + V_{SB}|} - \sqrt{|2\phi_F|}\right]$$

$$V_{th_2} = 0.4 + 1 \cdot \left[\sqrt{0.64+0.8} - \sqrt{0.64}\right]$$

$$= 0.8V$$

$$I_D = \frac{1}{2} \mu_n C_{ox} \frac{W}{L} \cdot (V_{GS} - V_{th})^2$$

$$4\times10^{-3} = \frac{1}{2} \cdot 500\times10^{-6} \cdot 100 \cdot (V_G - 0.8)^2$$

$$V_G = V_Y = 1.2V$$

c)

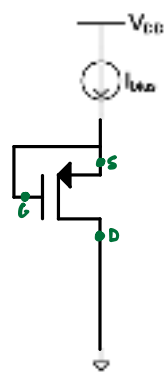

$V_{SG} = 0$

$V_{SG} - V_{thp} = 0.5V$

$V_{SD} = V_{DD}$

$V_{SD} > V_{eff}$

$\hookrightarrow V_{DD} = 0.5V$

Voltage of Node X: 0.8V, Voltage of Node Y: 1.2V

Minimum required V_{DD} = 0.5V

2. In the following circuit, assume that V_{DD} = 3V and the total dc power consumption of the circuit is 2.25mW, and the dc level of the output is 1.5 V. Furthermore, assume that M_1 is operating in saturation region, and for transistors we have $\lambda = 0$, $V_{TH0(NMOS)} = 0.5V$, $V_{TH0(PMOS)} = -0.5V$, $\mu_n C_{ox} = 200\ \mu A/V^2$, $\mu_p C_{ox} = 100\ \mu A/V^2$, and $(W/L)_1 = 80$.

Body Effect ($\gamma \neq 0$):

$$V_{th} = V_{th0} + \gamma \cdot \left[\sqrt{|2\phi_F + V_{SB}|} - \sqrt{|2\phi_F|} \right]$$

M_1: $V_{SB} = 0$, $V_{th_1} = 0.5V$

M_2:

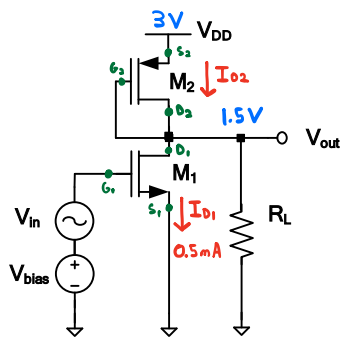

$$I_D = \frac{1}{2}\mu_n C_{ox}\frac{W}{L'}(V_{GS} - V_{TH})^2$$

$V_{eff_2} = V_{GS_2} - V_{th_2}$

a) Find the required V_{bias} for which the dc bias current of M_1 is 0.5 mA. **[4 marks]**
b) Find $(W/L)_2$. **[4 marks]**
c) Find R_L. **[4 marks]**
d) What is the small-signal gain of the circuit? **[4 marks]**
e) Is the assumption that M1 is operating in saturation correct. If so, why? **[2 marks]**
f) What is the maximum peak-to-peak symmetric signal swing of the output? **[2 marks]**

Regions of Operation (M_1, M_2):

M_1: $V_{GS_1} = V_{bias}$

$V_{eff_1} = V_{GS_1} - V_{th_1} = V_{bias} - 0.5V$

$$I_D = \frac{1}{2}\mu_n C_{ox}\frac{W}{L'}(V_{GS} - V_{TH})^2$$

$0.5mA = \frac{1}{2} \cdot 200\mu \cdot 80 \cdot (V_{bias} - 0.5)^2$

$\hookrightarrow V_{bias} = 0.75V$

Total Power Consumption:

$2.25mW = 3 \cdot 0.5mA + 3 \cdot I_{D2}$

$\hookrightarrow I_{D2} = 0.5mA$

e)

$V_{DS_1} = 1.5$

$V_{eff_1} = 0.75 - 0.5 = 0.25V$

$V_{DS_1} > V_{eff_1}$ SATURATION

M_2: $V_{SG_2} = 3 - 1.5 = 1.5V$

$V_{eff_2} = 1.5 - 0.5 = 1V$

$V_{SD_2} = 1.5V$

$$I_D = \frac{1}{2}\mu_p C_{ox}\frac{W}{L'}(V_{GS} - V_{TH})^2$$

For your convenience the circuit and its parameters are duplicated below:
V_{DD} = 3V and the total dc power consumption of the circuit is 2.25mW, and the dc level of the output is 1.5 V. Furthermore, $\lambda = 0$, $V_{TH0(NMOS)}$= 0.5V, $V_{TH0(PMOS)}$= –0.5V, $\mu_n C_{ox}$ = 200 $\mu A/V^2$, $\mu_p C_{ox}$=100 $\mu A/V^2$, and $(W/L)_{NMOS}$ =80.

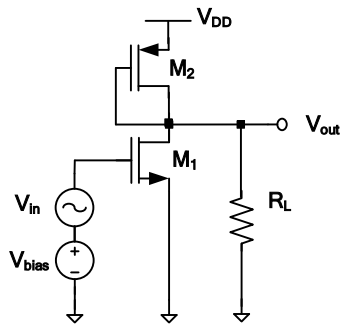

V_{bias} =___0.75V___. $(W/L)_2$=_____, R_L=_____

small-signal gain_____, region of operation of M_1=___Saturation___

output symmetric peak-to-peak signal swing=_____ ,

3. In the following circuit, assuming that the transistor is biased properly so that it is not operating in the cut-off region, show that in the small-signal domain, even when $\lambda > 0$ and $\gamma > 0$ (i.e., in the presence of channel length modulation and body effect), V_{out1} and V_{out2} are related by: $V_{out1}/V_{out2} = -R_D/R_S$. **[20 marks].**

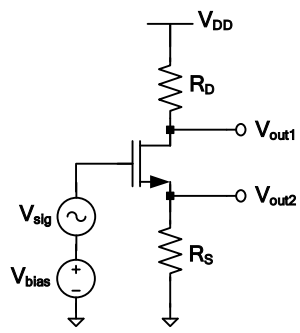

Small Signal Model:

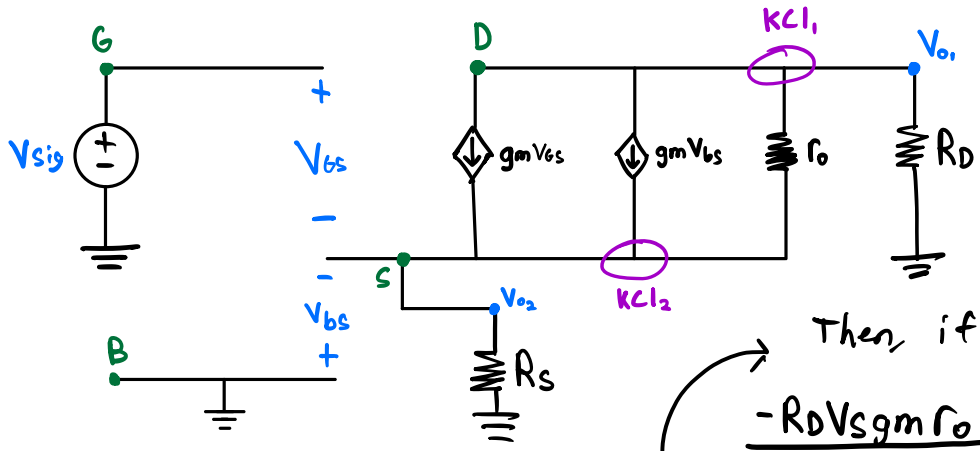

$$0 = g_m V_{gs} + g_m V_{bs} + \frac{V_{o1} - V_{o2}}{r_o} + \frac{V_{o1}}{R_D}$$

$$\frac{V_{o1} - V_{o2}}{r_o} + g_m V_{gs} + g_m V_{bs} = \frac{V_{o2}}{R_S}$$

$$V_{bs} = V_b - V_{o2} = -V_{o2}$$

$$V_{gs} = V_{sig} - V_{o2}$$

Solving these 4 eqn's for V_{o1}, V_{o2}, V_{gs}, V_{bs} yields the following

$$V_{o1} = \frac{-R_D V_s g_m r_o}{2R_s g_m r_o + R_D + R_s + r_o}, \quad V_{o2} = \frac{R_s V_s g_m r_o}{2R_s g_m r_o + R_D + R_s + r_o}$$

Then, if we divide V_{o1} by V_{o2}

$$\frac{-R_D V_s g_m r_o}{2R_s g_m r_o + R_D + R_s + r_o} \cdot \left[\frac{R_s V_s g_m r_o}{2R_s g_m r_o + R_D + R_s + r_o}\right]^{-1}$$

This all simplifies to

$$\boxed{\frac{V_{o1}}{V_{o2}} = \frac{-R_D}{R_S}}$$

4. Design the following two-stage amplifier with the schematic shown below and these design specifications:

- V_{DD}=1.8 V
- Total power consumption of the amplifier is 1.8 mW
- V_{bias1} and the level of V_{out1} and V_{out2} are all 0.9 V
- L=0.25 μm for both transistors
- The output impedance of the circuit, that is the impedance seen at V_{out2} is 1.8 kΩ

Assume the following technology parameters:
λ=0, V_{DD}=1.8V, $V_{TH(NMOS)}$ =0.4V, $V_{TH(PMOS)}$ =–0.4V, $\mu_n C_{ox}$=500 μA/V², $\mu_p C_{ox}$=250 μA/V².
Furthermore, assume that V_{in} is a small-signal source.

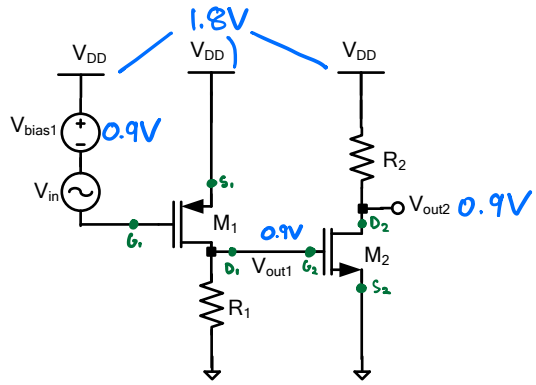

a) Find R_1, R_2, W_1 and W_2. **[12 marks]**
b) What is the overall gain of the system, i.e., V_{out2}/V_{in}. **[3 marks]**
c) What is the maximum symmetric peak-to-peak output swing. **[3 marks]**
d) If the input V_{in} is a small-signal sinusoid, what would be the maximum amplitude of the input signal for which the circuit operates as expected. **[2 marks]**

$$I_D = \frac{1}{2}\mu_n C_{ox}\frac{W}{L}(V_{GS}-V_{TH})^2$$

The output impedance of the circuit, that is the impedance seen at V_{out2} is 1.8 kΩ

Regions of Operation (M_1, M_2):

M_1: $V_{SG_1} = 1.8 + 0.9 - 1.8 = 0.9V$

$V_{eff_1} = V_{SG_1} - V_{th_1} = 0.9 - 0.4 = 0.5V$

$V_{SD_1} = 1.8 - 0.9 = 0.9V$

$V_{SD_1} > V_{eff_1}$ Saturation

M_2: $V_{GS_2} = 0.9 - 0 = 0.9V$

$V_{eff_2} = V_{GS_2} - V_{th_2} = 0.9 - 0.4 = 0.5V$

$V_{DS_2} = 0.9 - 0 = 0.9V$

$V_{DS_2} > V_{eff_2}$ Saturation

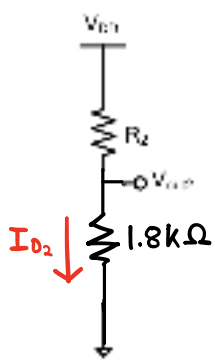

$I_{D_2} = \frac{0.9}{1.8k} = 0.5mA$

$1.8 \cdot \left(\frac{1}{2} \cdot 250\times10^{-6} \cdot \left(\frac{W_1}{0.25u}\right) \cdot 0.5^2 + 0.5\times10^{-3}\right) = 1.8\times10^{-3}$

$W_1 = 4um$

$0.5\times10^{-3} = \frac{1}{2} \cdot 500\times10^{-6} \cdot \left(\frac{W_2}{0.25u}\right) \cdot 0.5^2$

$W_2 = 2um$

$R_1 = \frac{0.9V}{0.5mA} = 1.8k\Omega$

$R_2 = \frac{1.8 - 0.9}{0.5mA} = 1.8k\Omega$

Total power consumption $= V_{DD} I_{D_1} + V_{DD} I_{D_2} = 1.8mW$

$1.8mW = V_{DD} \cdot (I_{D_1} + I_{D_2})$
$= 1.8 (I_{D_1} + I_{D_2})$

b) $(-g_{m1}R_{D1})(-g_{m2}R_{D2})$

$$= \left[\frac{-2\cdot 0.5mA}{0.5}\cdot 1.8k\Omega\right]\cdot\left[\frac{-2\cdot 0.5mA}{0.5}\cdot 1.8k\Omega\right]$$

$$= 12.96\ V/V$$

W_1= 4 µm, W_2= 2 µm, R_1= 1.8 kΩ, R_2= 1.8 kΩ,

V_{out2}/V_{in}= 12.96 V/V, Maximum pea-to-peak symmetric output swing=_____V

Maximum amplitude of the small-signal input sinusoid = _____mV

5. Consider the following circuit:

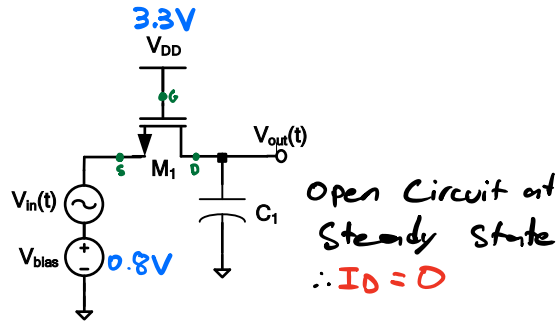

The technology parameters are:
$\lambda_{(NMOS)}$=0 V^{-1}, γ=0, V_{DD}=3.3 V, $V_{TH(NMOS)}$=0.5V, $\mu_n C_{ox}$=0.1 mA/V^2, and C_{ox}= 5 fF/μm^2.

Assume C_1 = 2 pF and for the transistor we have: L_1= 0.5 μm and W_1= 5 μm.
a) If V_{bias}=0.8 V, what is the region of operation of the transistor and why**? [6 marks]**
b) If the input signal, $V_{in}(t)$, is a step function with a small magnitude of 10 mV (i.e., V_{in} abruptly changes from 0 V to 10 mV at time t = 0), what is $V_{out}(t)$ for $t \geq 0$? **[6 marks]**
c) Repeat parts (a) and (b) for V_{bias}=1.8V. **[8 marks]**

Region of Operation:

$V_{GS} = 3.3 - 0.8 = 2.5V > V_{th}$

$I_D = 0$

$V_{DS} = 0 \rightarrow V_{DS} << 2(V_{GS} - V_{th})$ DEEP TRIODE

c) Region of Operation:

$V_{GS} = 3.3 - 1.8 = 1.5V > V_{th}$

$I_D = 0$

$V_{DS} = 0 \rightarrow V_{DS} << 2(V_{GS} - V_{th})$ DEEP TRIODE

For V_{bias}=0.8V: Region of operation of M_1: Deep Triode, $V_{out}(t)$=_____

For V_{bias}=1.8V: Region of operation of M_1: Deep Triode, $V_{out}(t)$=_____

This is intentionally left blank.